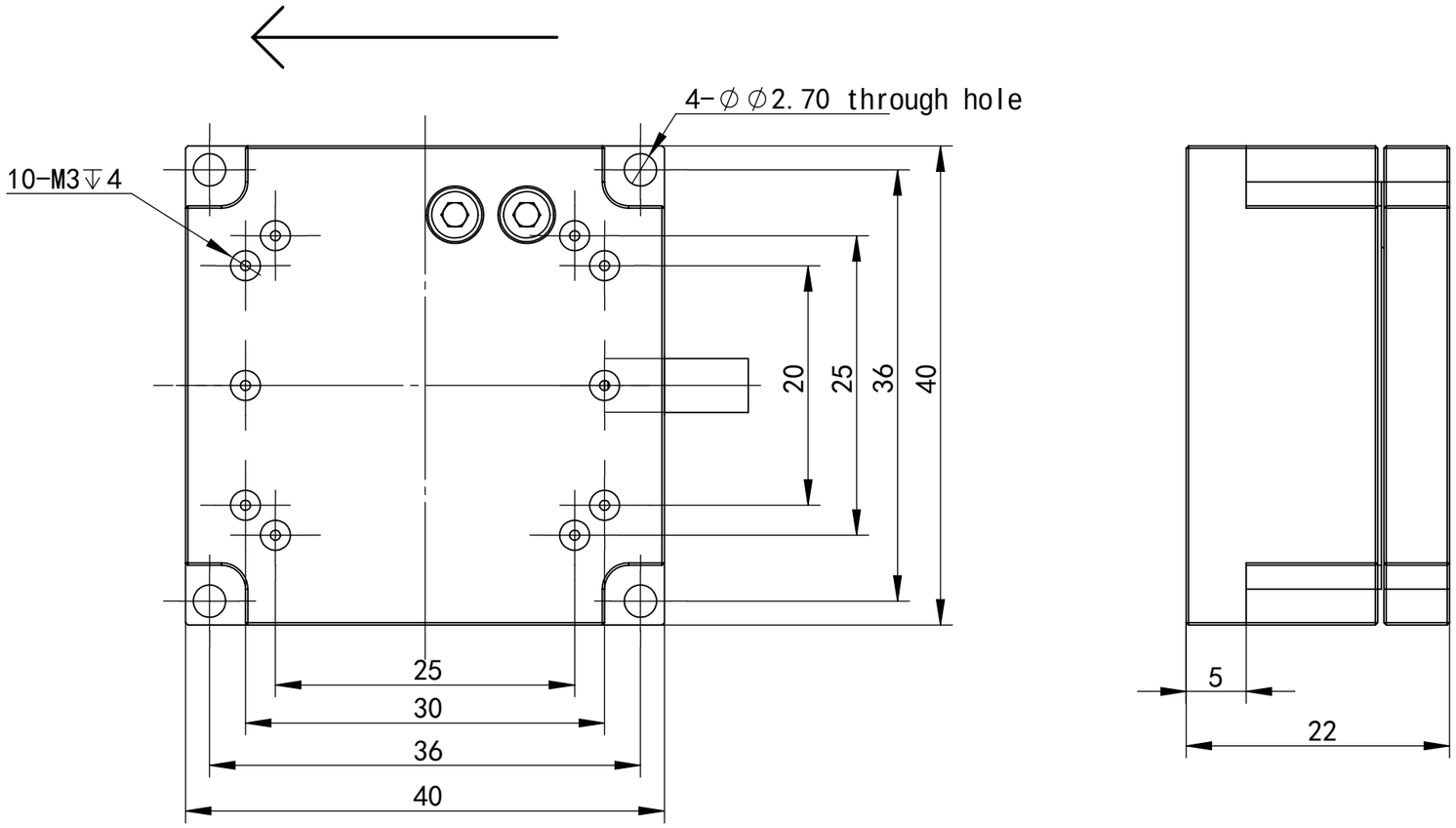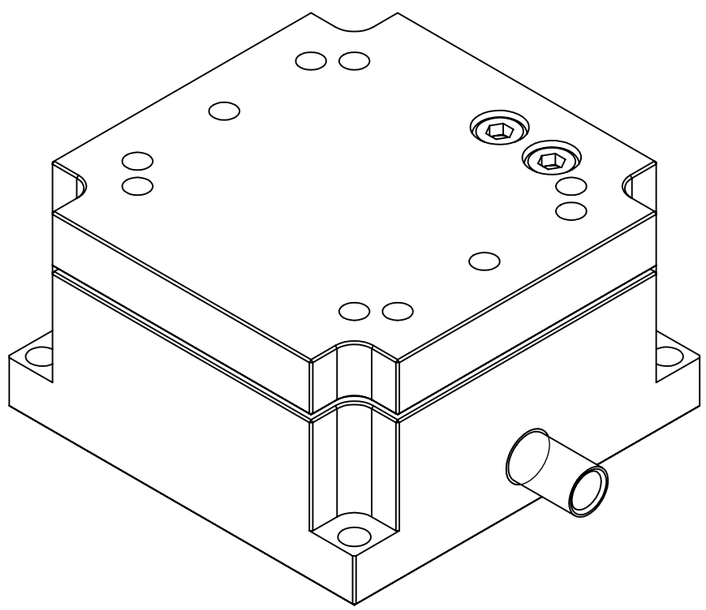
4-∅∅2.70 through hole
10-M3↧4
20
25
36
40
25
30
36
40
5
22